PICOTE
LIFE FOR PIPES

LATERAL OPENING QUICK GUIDE

BATTERY MINI MILLER

CLAY PIPES

Version: 1

Issue Date: April 2022

STANDARD

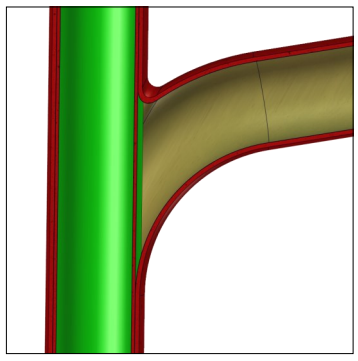

UNLINED

Twister Mini Express

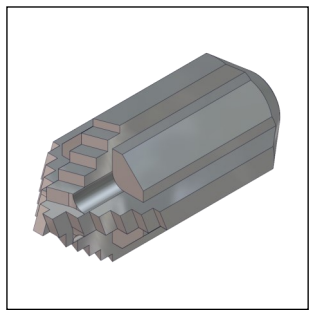

Special Drill Head

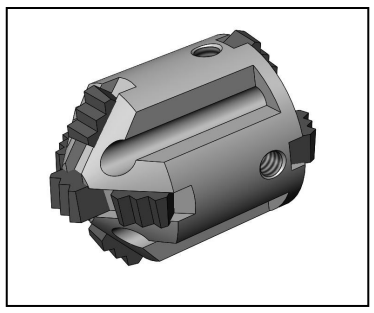

Tiger Bore

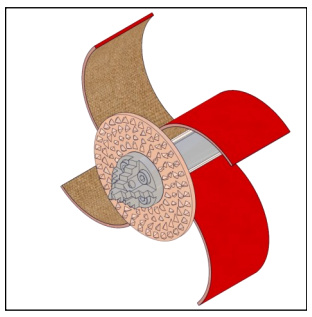

Smart Cutter™

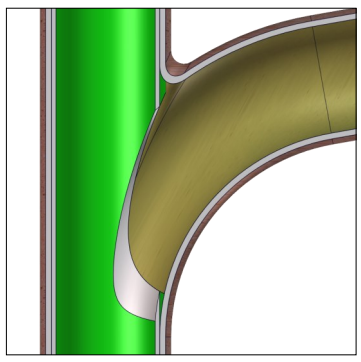

OPENED

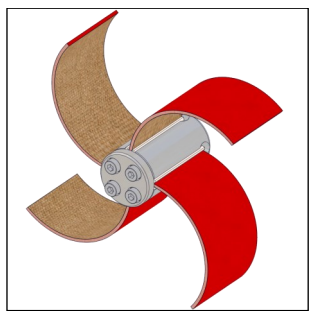

Smart Cutter™

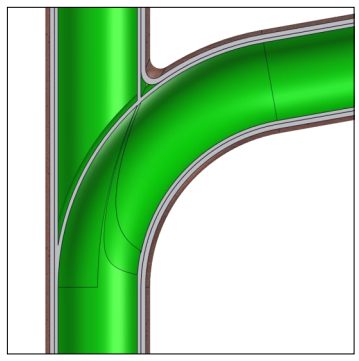

LINED

Twister Mini Express

SPECIAL

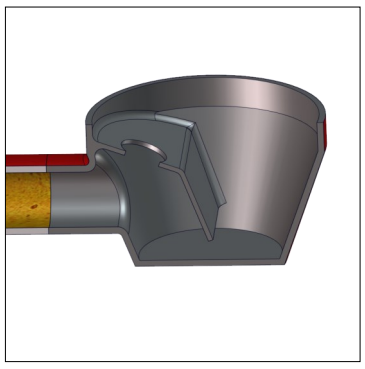

FLOOR DRAIN

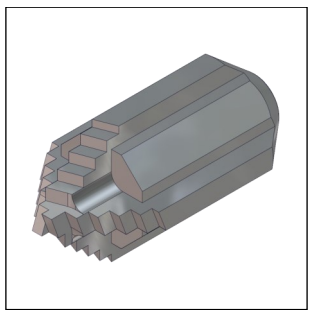

Special Drill Head

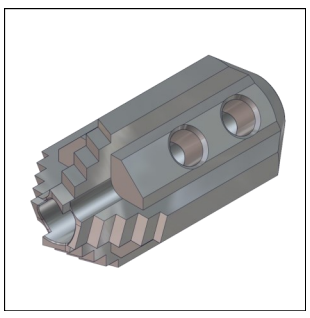

Special Drill Head (3D)

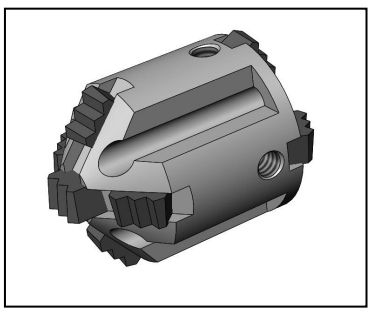

Tiger Bore

Smart Cutter™

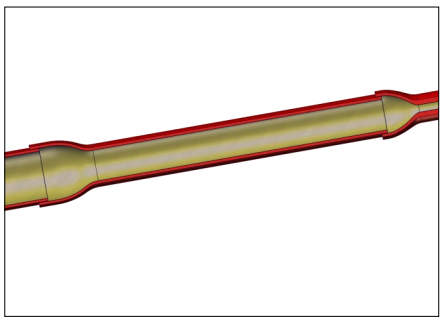

SIZE CHANGE

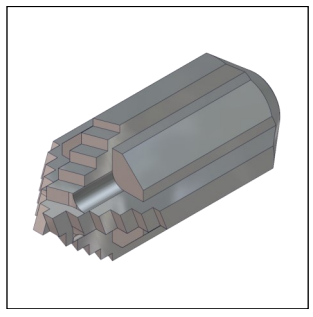

Special Drill Head

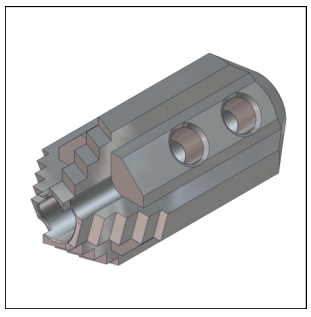

Special Drill Head (3D)

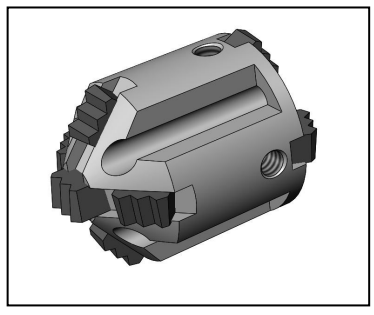

Tiger Bore

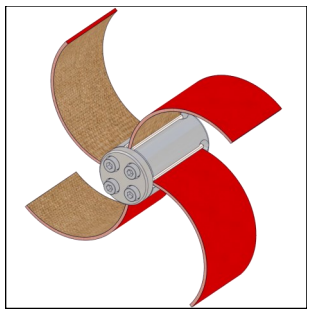

Smart Cutter™

Battery Mini Miller

Shaft Diameter: **8 mm (⅓")**

Mini Miller Range: **16 metres (50 ft)**

Additional Extension:** **10 metres (32 ft)**

Recommended Diameter Range: **DN50-70 (2-3")**

** Shaft extension sold separately.

Available Tools	Size Diameter
Smart Cutter™	DN50 - 75 (2 - 3")
Twister Mini Express	DN50 - 70 (2 - 3")
Special Drill Head	DN50 - 75 (2 - 3")
Special Drill Head (3D)	DN50 - 75 (2 - 3")
Tiger Bore	DN50 - 75 (2 - 3")